# PIPING AND INSTRUMENTATION DIAGRAM
# FIRE PROTECTION SYSTEM FM 200

NOTES :

1. TWO (2) MANIFOLDS OF FM-200 CYLINDERS (ONE MANIFOLD FOR STANDBY, ONE MANIFOLD FOR RESERVE).
2. UPON RECEIVING CONFIRMED FIRE SIGNAL FROM F&G PANEL, THERE WILL 30 SECONDS TIME DELAY BEFORE RELEASING.
3. PROVIDED VENT LINE IN EACH PROTECTED ROOM TO RELEASE FM-200 AFTER FIRE HAS BEEN EXTINGUISHED.
4. RELEASE INDICATOR LAMP, WORKING ALARM BELL SHALL BE PROVIDED FOR EACH ROOM PROTECTED BY FM-200.
5. MANUAL RELEASE PUSH BUTTON SHALL BE PROVIDED FOR EACH ROOM AND SHALL BE LOCATED OUTSIDE OF EACH ROOM PROTECTED BY FM-200.
6. INHIBIT / HOLD PUSH BUTTON SHALL BE PROVIDED FOR EACH ROOM AND SHALL BE LOCATED OUTSIDE OF EACH ROOM PROTECTED BY FM-200.
7. FM-200 SYSTEM TO BE FINALIZED BY VENDOR.
8. THE SOLENOID VALVE SHALL ALSO CAN BE MANUALLY OPERATED.
9. FM-200 IS BOOSTED WITH N2 STORED IN FM-200 CYLINDER.
10. UPON RECEIVING CONFIRMED FIRE SIGNAL, F&G SYSTEM PANEL TO SEND SIGNAL TO HVAC SYSTEM TO TURN OFF THE HVAC DURING FM-200 DISCHARGE.
11. THE SYSTEM SHALL BE ARRANGED SO THAT THE CYLINDER RELEASE AS PER REQUIRED IN RESPECTIVE PROTECTED ROOM. THE REQUIRED CYLINDER PER ROOM REFER TO DOCUMENT TMBP-11-PS-CAL-104, CALCULATION FOR INERT GAS AGENT FM-200.

| DRAWING REFERENCE | DESCRIPTION | REV | DATE | DESCRIPTION | PREPR'D | CHECK'D | APRV'D | CHECKED | APPROVED |
|---|---|---|---|---|---|---|---|---|---|
| TMBP-01-PS-PID-102 | P&ID FOR FIRE PROTECTION SYSTEM (FM200) | A | 11-12-2025 | ISSUED FOR REVIEW | DDS | MAN | RTN | | |

PT. PERTAMINA EP APPROVAL

PROCET :

JASA PEMBANGUNAN FASILITAS PRODUKSI STASIUN PENGUMPUL (SP)
TANJUNG MIRING BARAT & KARANGAN TIMUR

OWNER :

skkmigas PERTAMINA EP

CONTRACTOR :

POG

| SCALE : | DRAWING NO. | SHEET. NO. | REV |
|---|---|---|---|
| NTS | TMBP – SP001 – PS – PID – D102 | 01 OF 02 | A |

DRAWING TITLE :

PID FOR FIRE PROTECTION SYSTEM (FM200)

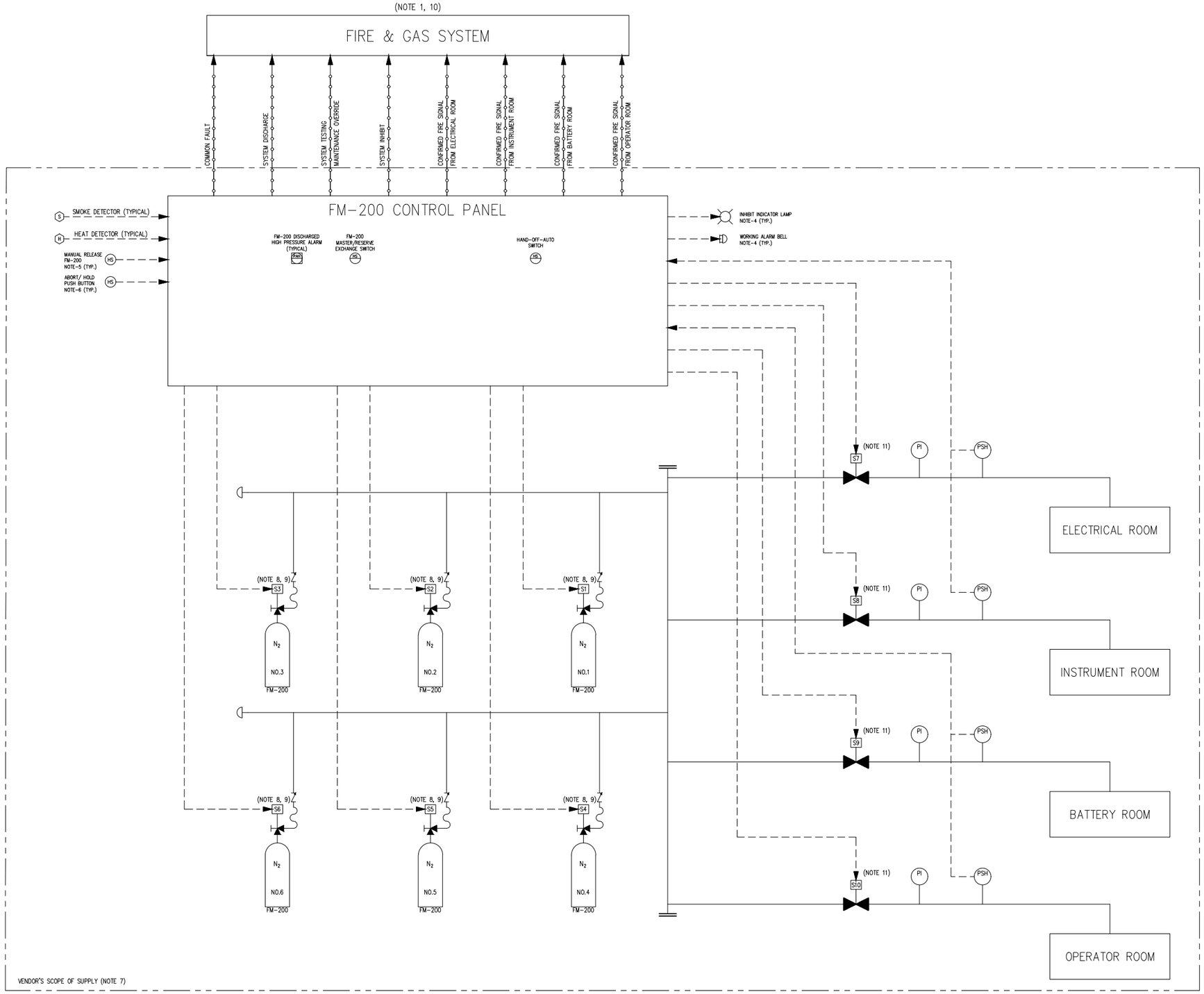


NOTES :

1. TWO (2) MANIFOLDS OF FM-200 CYLINDERS (ONE MANIFOLD FOR STANDBY, ONE MANIFOLD FOR RESERVE).
2. UPON RECEIVING CONFIRMED FIRE SIGNAL FROM F&G PANEL, THERE WILL 30 SECONDS TIME DELAY BEFORE RELEASING.
3. PROVIDED VENT LINE IN EACH PROTECTED ROOM TO RELEASE FM-200 AFTER FIRE HAS BEEN EXTINGUISHED.
4. RELEASE INDICATOR LAMP, WORKING ALARM BELL SHALL BE PROVIDED FOR EACH ROOM PROTECTED BY FM-200.
5. MANUAL RELEASE PUSH BUTTON SHALL BE PROVIDED FOR EACH ROOM AND SHALL BE LOCATED OUTSIDE OF EACH ROOM PROTECTED BY FM-200.
6. INHIBIT / HOLD PUSH BUTTON SHALL BE PROVIDED FOR EACH ROOM AND SHALL BE LOCATED OUTSIDE OF EACH ROOM PROTECTED BY FM-200.
7. FM-200 SYSTEM TO BE FINALIZED BY VENDOR.
8. THE SOLENOID VALVE SHALL ALSO CAN BE MANUALLY OPERATED.
9. FM-200 IS BOOSTED WITH N2 STORED IN FM-200 CYLINDER.
10. UPON RECEIVING CONFIRMED FIRE SIGNAL, F&G SYSTEM PANEL TO SEND SIGNAL TO HVAC SYSTEM TO TURN OFF THE HVAC DURING FM-200 DISCHARGE.
11. THE SYSTEM SHALL BE ARRANGED SO THAT THE CYLINDER RELEASE AS PER REQUIRED IN RESPECTIVE PROTECTED ROOM. THE REQUIRED CYLINDER PER ROOM REFER TO DOCUMENT TMBP-11-PS-CAL-104, CALCULATION FOR INERT GAS AGENT FM-200.

| DRAWING REFERENCE | DESCRIPTION | REV | DATE | DESCRIPTION | PREPR'D | CHECK'D | APRV'D | CHECKED | APPROVED |
|---|---|---|---|---|---|---|---|---|---|
| TMBP-01-PS-PID-102 | P&ID FOR FIRE PROTECTION SYSTEM (FM200) | A | 11-12-2025 | ISSUED FOR REVIEW | DDS | MAN | RTN | | |

PT. PERTAMINA EP APPROVAL

PROCET :
JASA PEMBANGUNAN FASILITAS PRODUKSI STASIUN PENGUMPUL (SP) TANJUNG MIRING BARAT & KARANGAN TIMUR

OWNER : skkmigas PERTAMINA EP

CONTRACTOR : POG

| SCALE : | DRAWING NO. | SHEET. NO. | REV |
|---|---|---|---|
| NTS | TMBP – SP001 – PS – PID – D102 | 02 OF 02 | A |

DRAWING TITLE :
PID FOR FIRE PROTECTION SYSTEM (FM200)